Tape and Reel Specifications

5mm x 3.2mm SMD Packages

TAPE SPECIFICATION

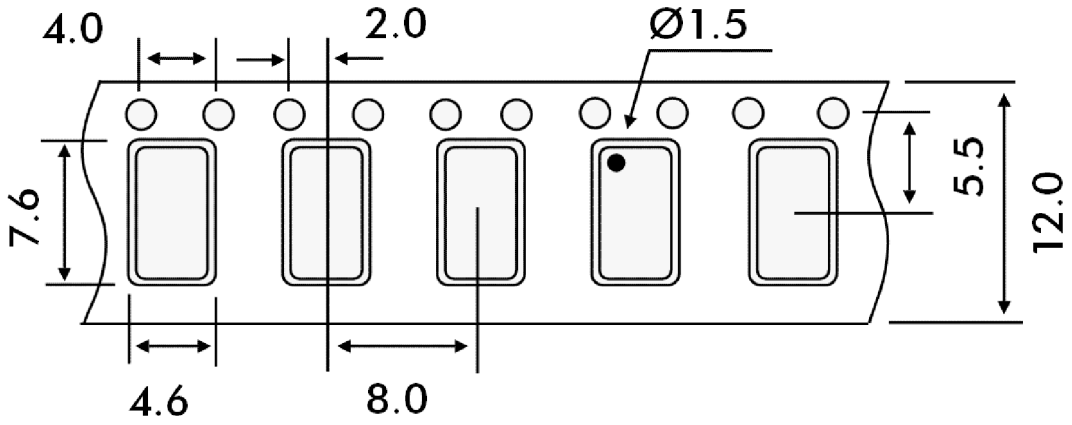

REEL SPECIFICATION

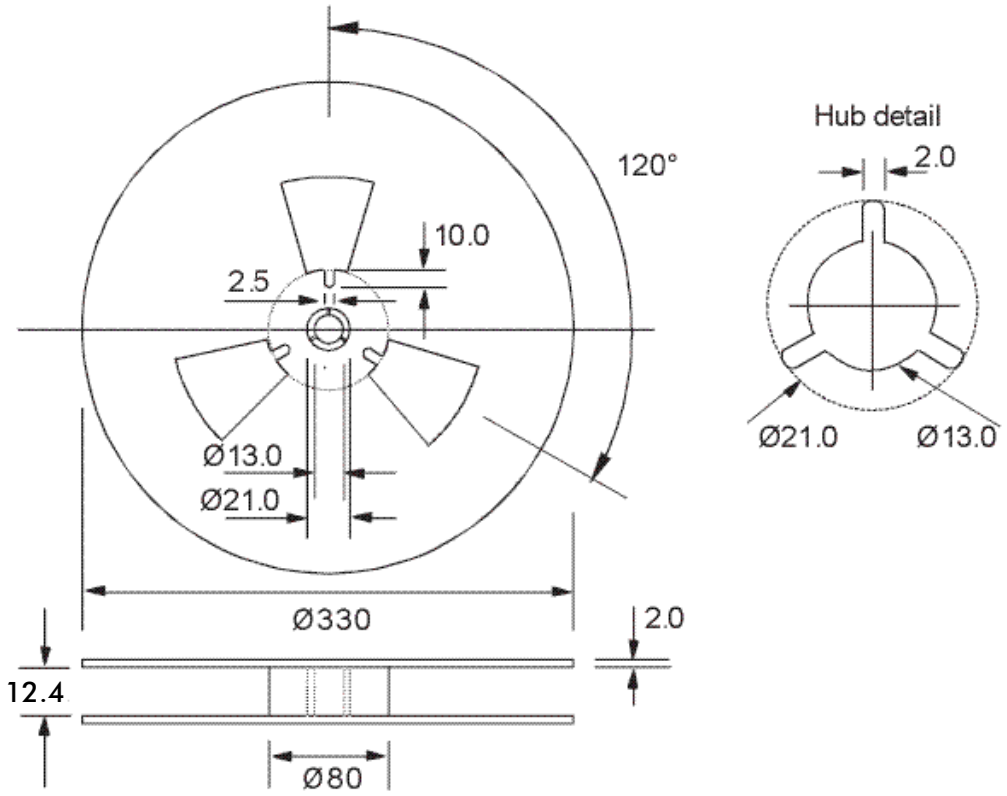

EUROQUARTZ LIMITED Blacknell Lane CREWKERNE Somerset UK TA18 7HE
Tel: +44 (0)1460 230000 Fax: +44 (0)1460 230001 Email: info@euroquartz.co.uk www.euroquartz.co.uk